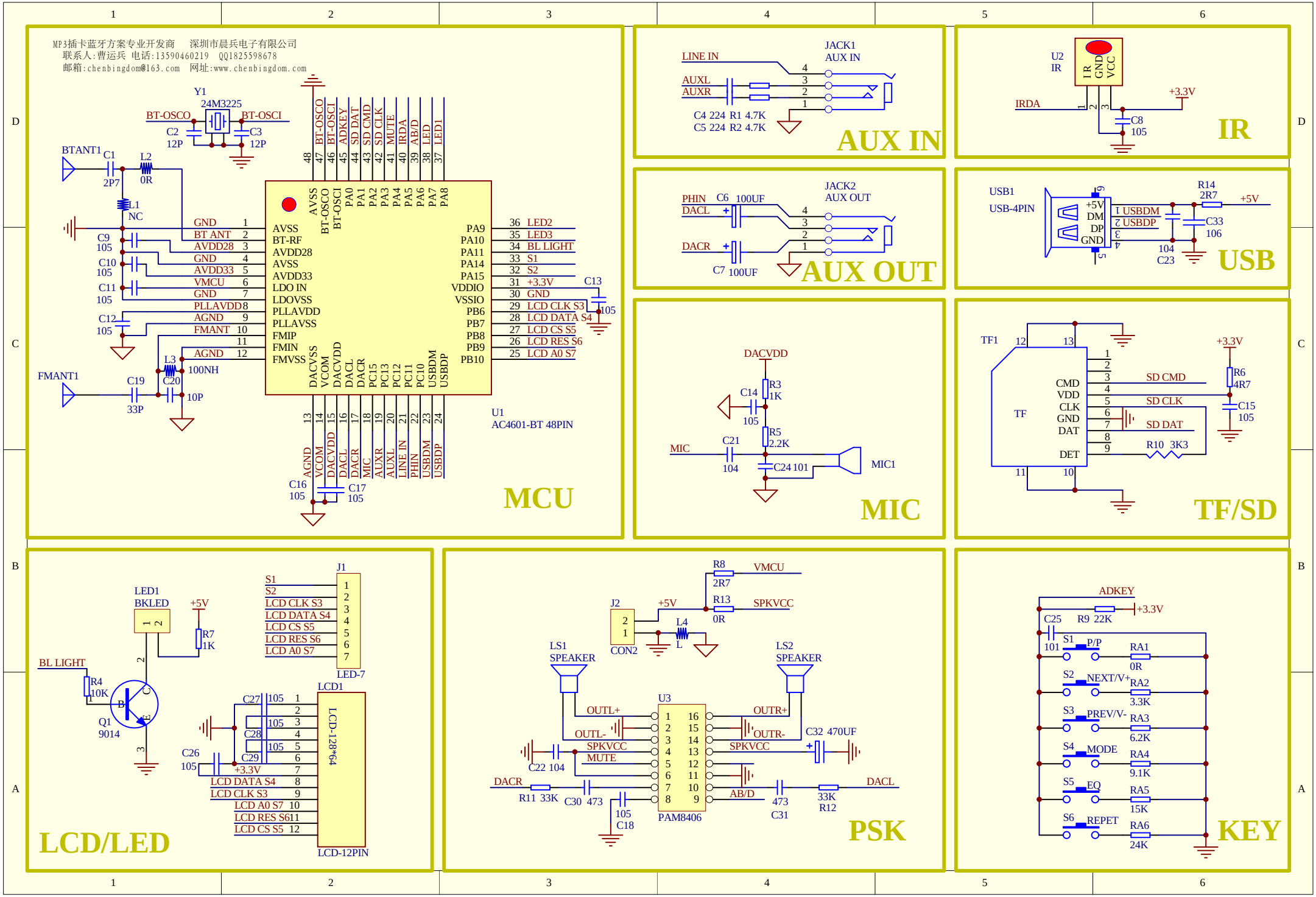
MP3插卡蓝牙方案专业开发商 深圳市晨兵电子有限公司
联系人:曹运兵 电话:13590460219 QQ1825598678
邮箱:chenbingdom@163.com 网址:www.chenbingdom.com
MCU
U1
AC4601-BT 48PIN
Y1
24M3225
BT-OSCO
BT-OSCI
BTANT1
FMANT1
AUX IN
JACK1
AUX IN
LINE IN
AUXL
AUXR
C4 224 R1 4.7K
C5 224 R2 4.7K
IR
U2
IR
IRDA
+3.3V
AUX OUT
JACK2
AUX OUT
PHIN
DACL
DACR
USB
USB1
USB-4PIN
USBDM
USBDP
MIC
DACVDD
MIC1
TF/SD
TF1
SD CMD
SD CLK
SD DAT
LCD/LED
LED1
BKLED
BL LIGHT
Q1
9014
J1
LED-7
LCD1
LCD-128*64
LCD-12PIN
PSK
J2
CON2
LS1
SPEAKER
LS2
SPEAKER
VMCU
SPKVCC
OUTL+
OUTL-
OUTR+
OUTR-
MUTE
AB/D
PAM8406
KEY
ADKEY
P/P
NEXT/V+
PREV/V-
MODE
EQ
REPET